Trapezoid Bag

Size: 21cm (w) x 16cm (d) x 16cm (h) - Stitched Version





Video Tutorial: https://youtu.be/GyjKSeBFBl0

YouTube Channel: www.youtube.com/@mprleatherworks

A4 SIZE

COPYRIGHT NOTICE

By using this pattern you agree to the following Copyright notice.

© Copyrights **MPR Leatherworks** agreement.

Please take note that this pattern (design) is strictly owned by **MPR Leatherworks**.

YOU MAY - When you purchase this design, make and sell the physical product for personal use and commercial gain.

YOU MAY NOT - In any way or form, in part or in full, sell, donate or gift the pattern (designs).
This pattern is, and remains the property of **MPR Leatherworks**
By clicking “Buy” or “Purchase” on any of the sites that MPR Leatherworks makes its patterns (designs) available, you agree to this copyright agreement and are held liable for © Copyright breach.

Signed: MPR Leatherworks (www.mprleatherworks.co.za)

© COPYRIGHTS
www.mprleatherworks.co.za

A4 SIZE

150mm

250mm

TEST PAGE

1. Please ensure that you have selected A4 paper size on your printer.

2. Print this test page BEFORE you print the rest of the project.

3. Use a ruler and ensure both vertical and horizontal measurements of the rectangle measures 250mm x 150mm.

4. If the measurements are correct, you can print the rest of the pattern using the same printer settings.

© COPYRIGHTS
www.mprleatherworks.co.za

A4 SIZE

Printer Settings:

Please ensure to select A4 paper size.
Please ensure the scaling is set to 100% or “Actual Size”
Mac and Windows print settings can vary.

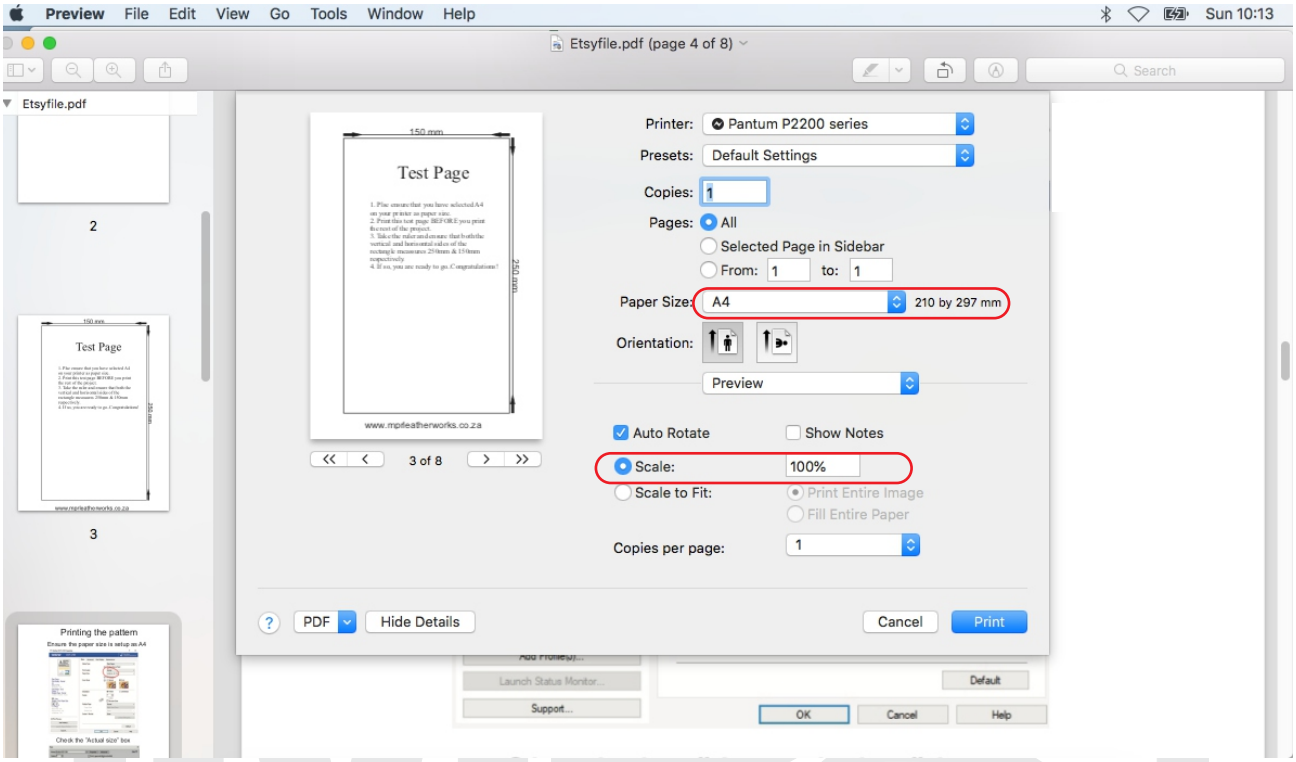

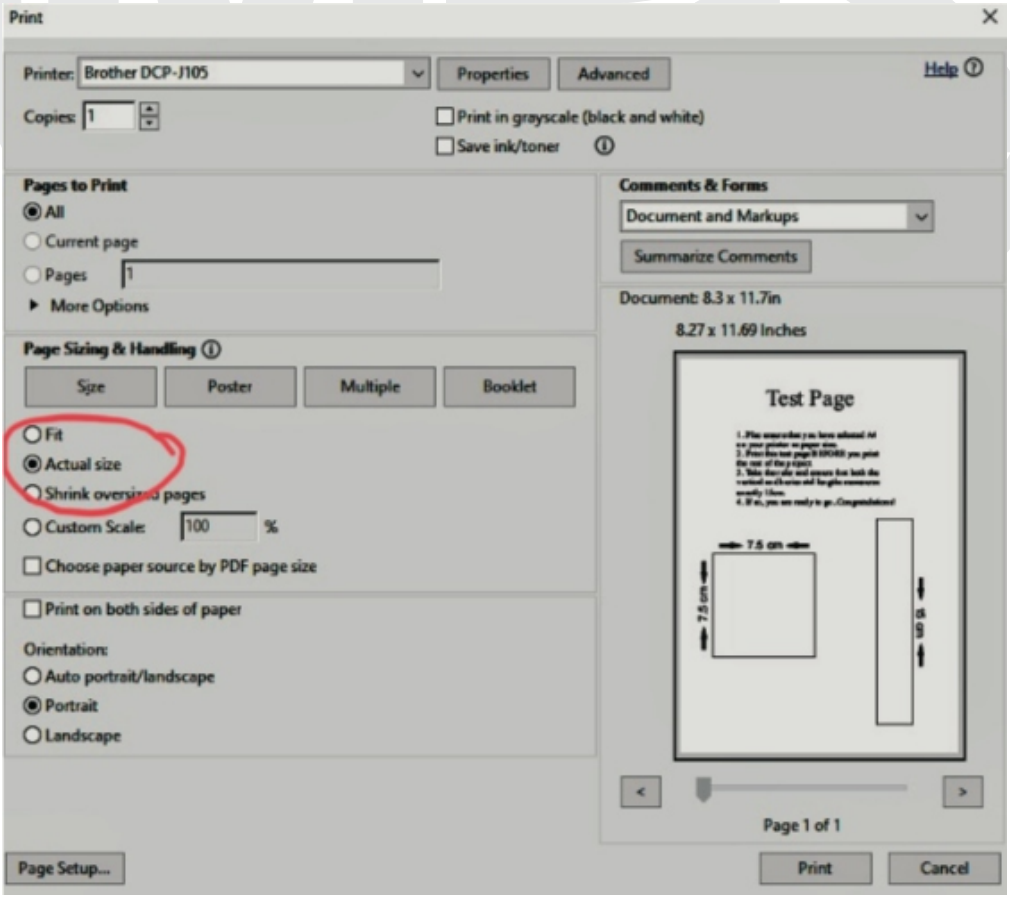

© COPYRIGHTS
www.mprleatherworks.co.za

A4 SIZE

Basic Project Requirements:

Leather requirements:
~5-6oz Veg Tan Leather = ~3,85ft^2

Other requirements:
PDF Viewer
Black & White A4 Printer
Sharp Knife
Masking Tape
Hole Punch: 1mm & 3,5mm (depending on rivet size)
Tubular Rivets: x4 (9mm head, 6mm stem)
D-Rings x2 (16mm inner diameter)
Buckle x1 (15mm inner size)
Swivel clips x2 (for the strap)
Waxed stitching thread & stitching needles.
General leather craft tools (mallet, knife, edger, beveller, etc)
General leather supplies (stain/dye/finisher)

Basic starting procedure:

1.Print the PDF pattern on A4 paper.
2. Start by printing the test page first and check that the sizing is correct.
3. Once the pattern is printed, cut out the pattern by cutting about 2-3mm from the cut lines.
4. Sometimes the pattern needs joining as it does not fit on an A4 paper. In this case, cut the pattern on the cut line exahhh around the pattern pieces.
7. Punch all the punching holes as shown on the pattern.
8. Punch/Cut all the decorative parts in the pattern.
9. Cut the leather exactly to the cut line on the pattern.

Your leather parts are now ready to assemble.
Some parts will need skiving, burnishing, tooling or other work before the assembling process.

Enjoy the project!

Visit our website for more leather patterns.
www.mprleatherworks.co.za

© COPYRIGHTS
www.mprleatherworks.co.za

A4 SIZE

Summary of Parts

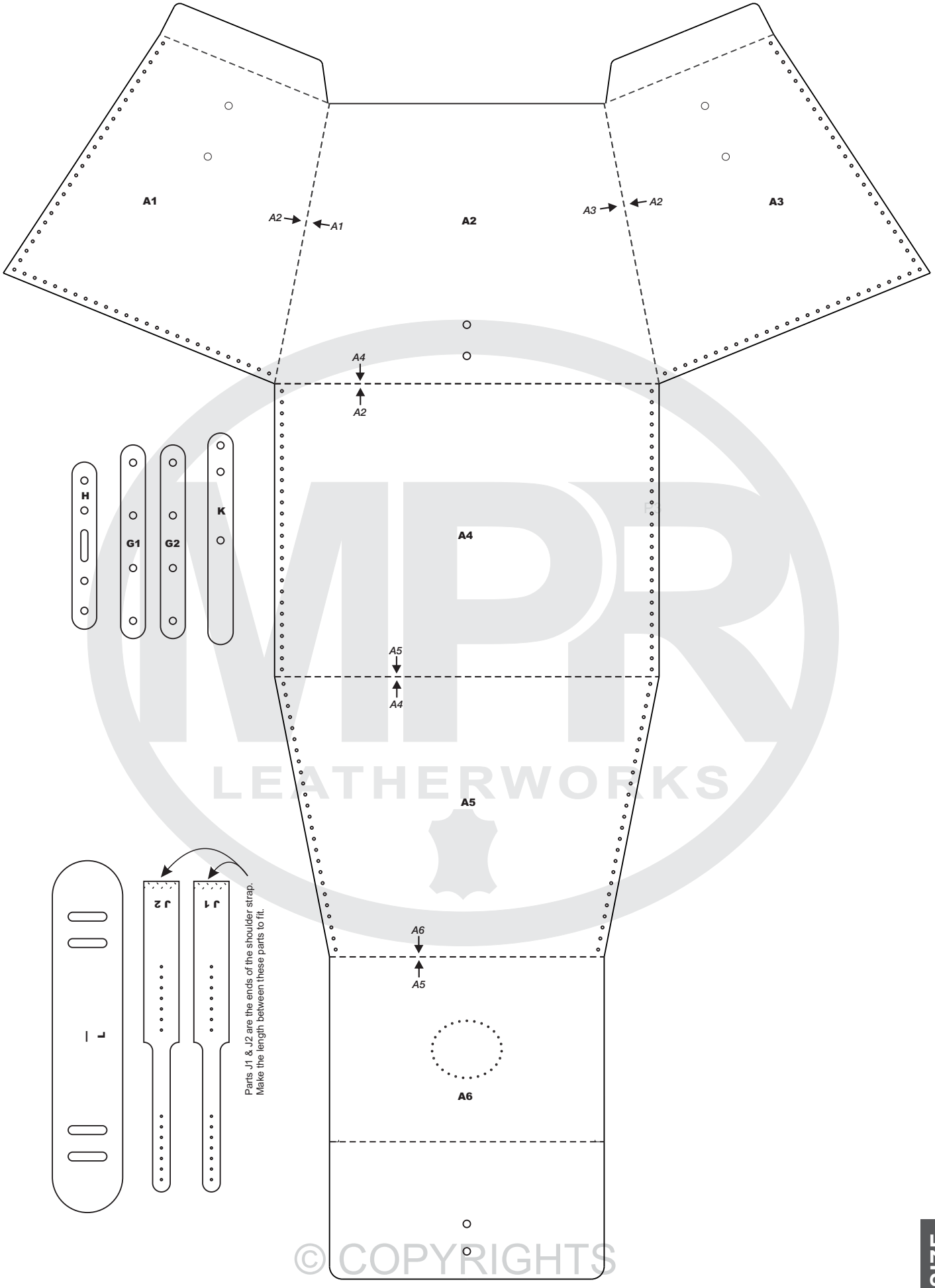

MPR LEATHERWORKS
© COPYRIGHTS
www.mprleatherworks.co.za

A4 SIZE

Summary of Parts



© COPYRIGHTS
www.mprleatherworks.co.za

A4 SIZE

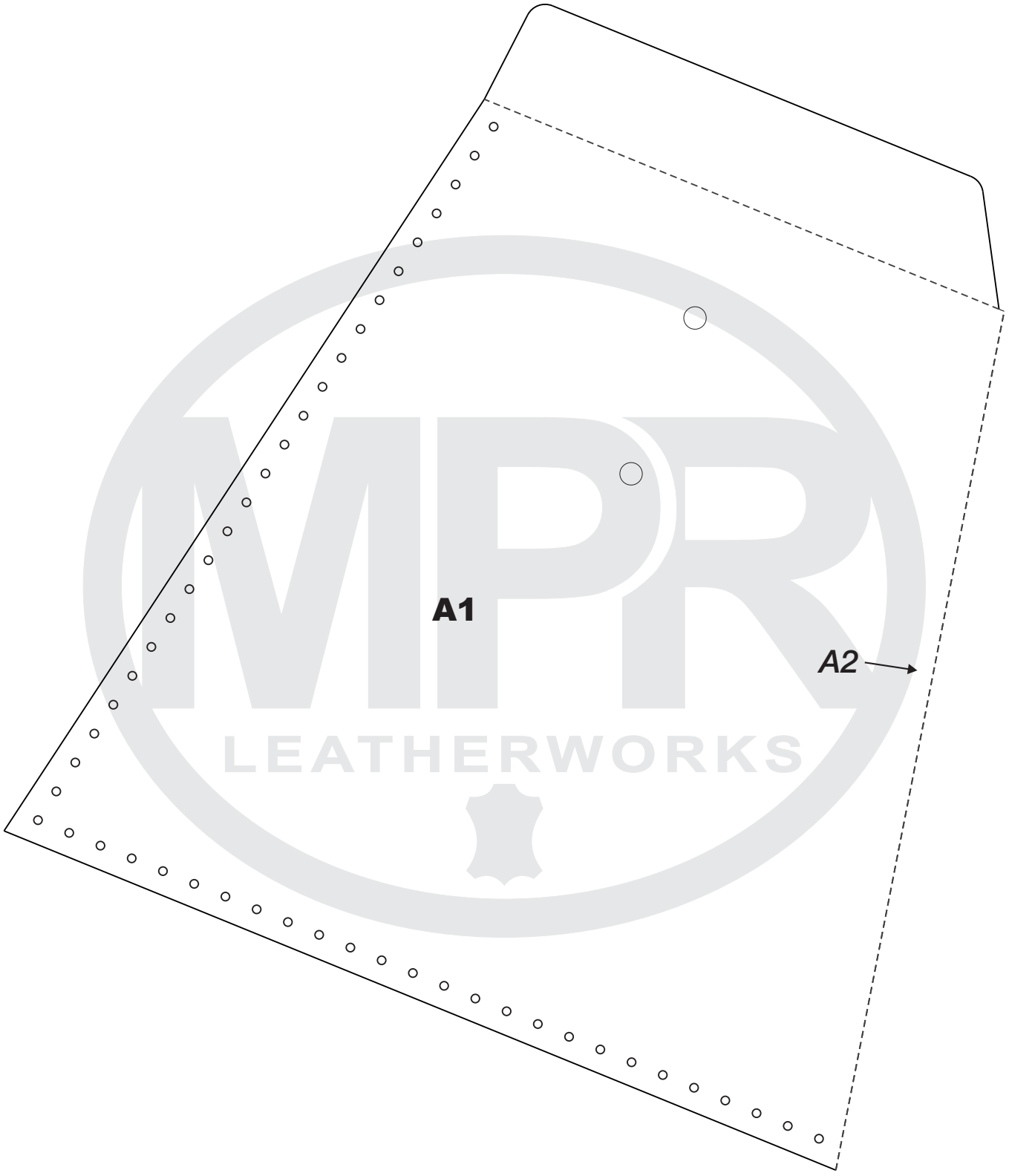

© COPYRIGHTS
www.mprleatherworks.co.za

A4 SIZE

P2

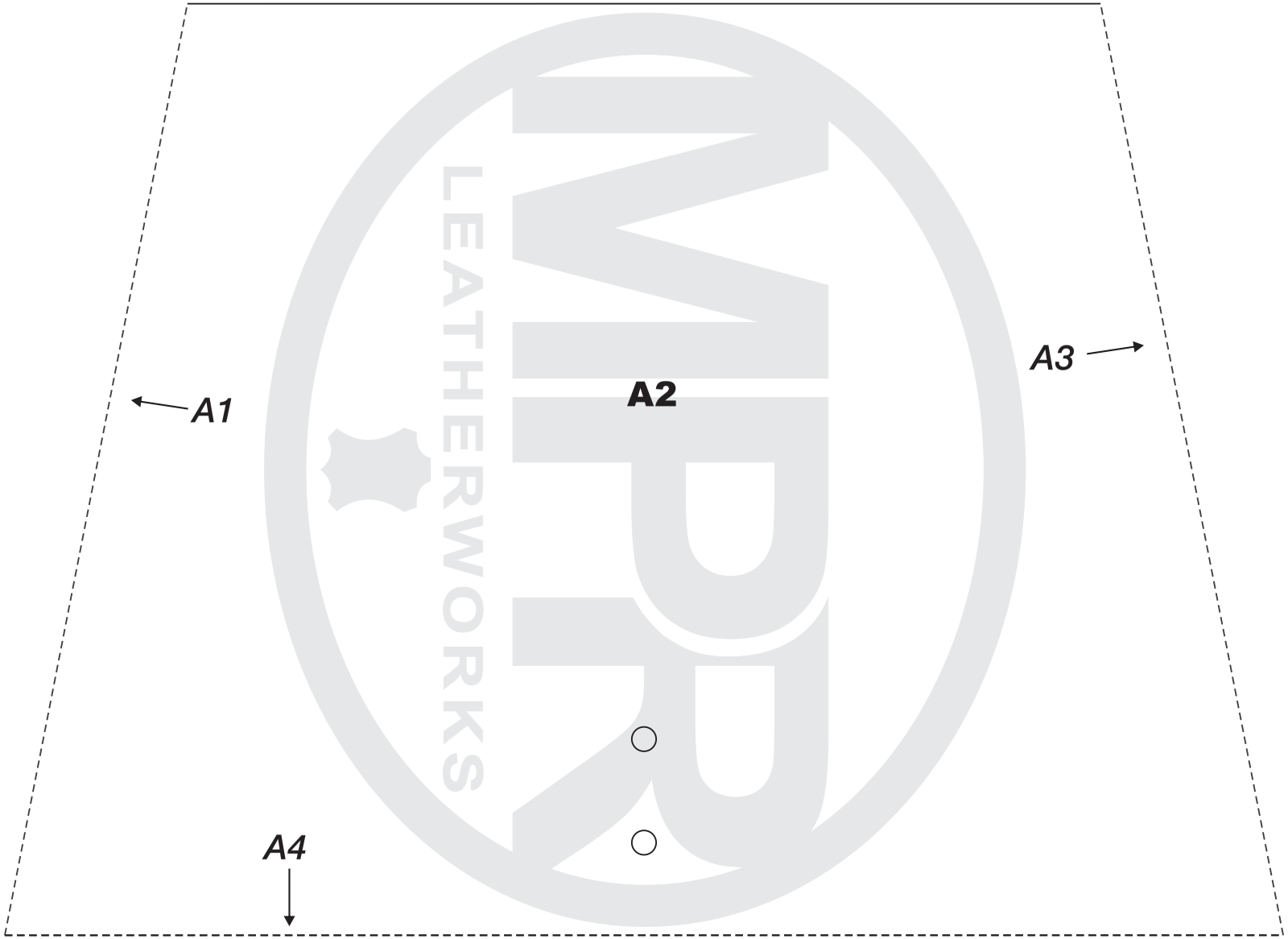

© COPYRIGHTS
www.mprleatherworks.co.za

A4 SIZE

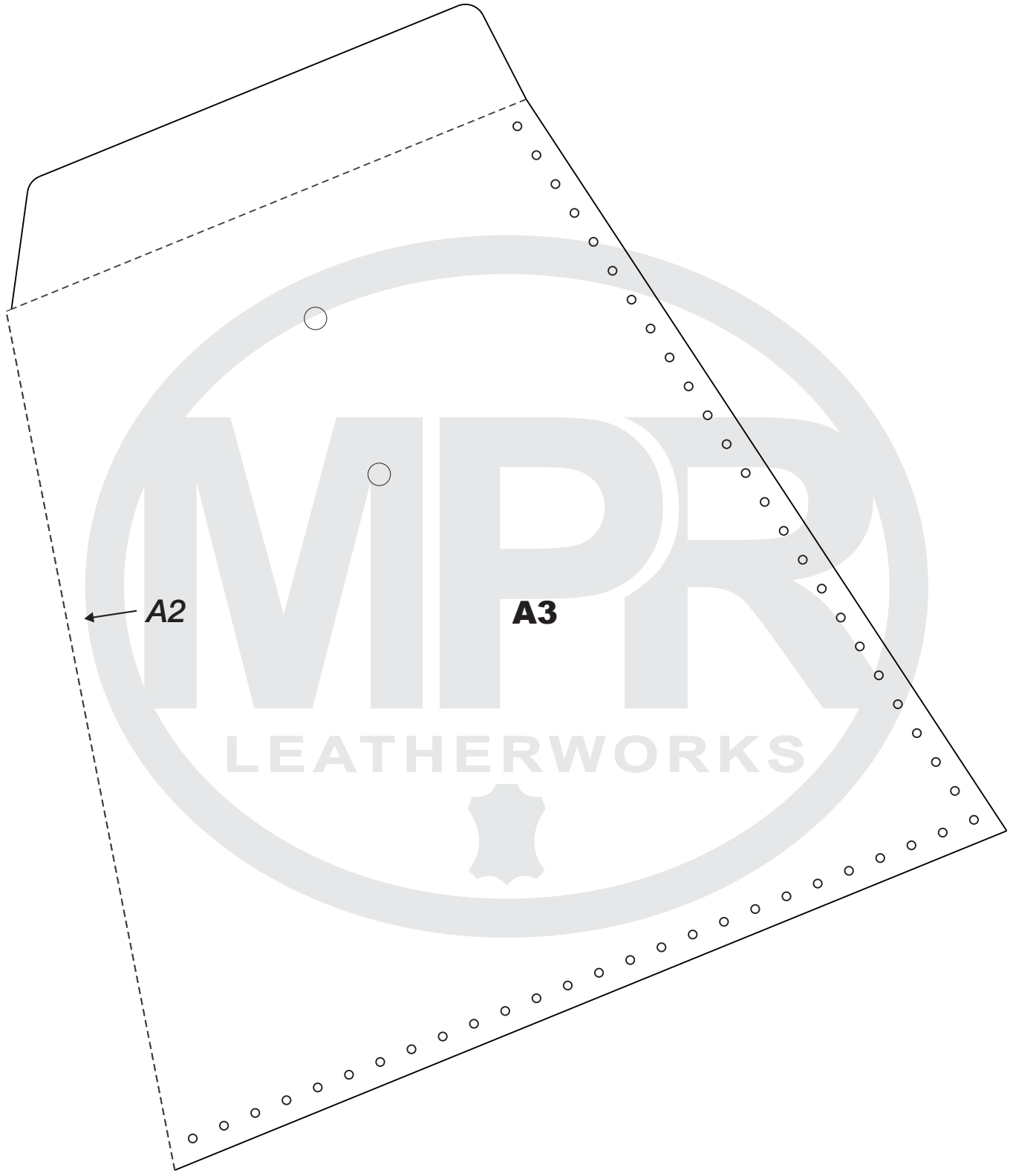

© COPYRIGHTS
www.mprleatherworks.co.za

A4 SIZE



© COPYRIGHTS
www.mprleatherworks.co.za

A4 SIZE

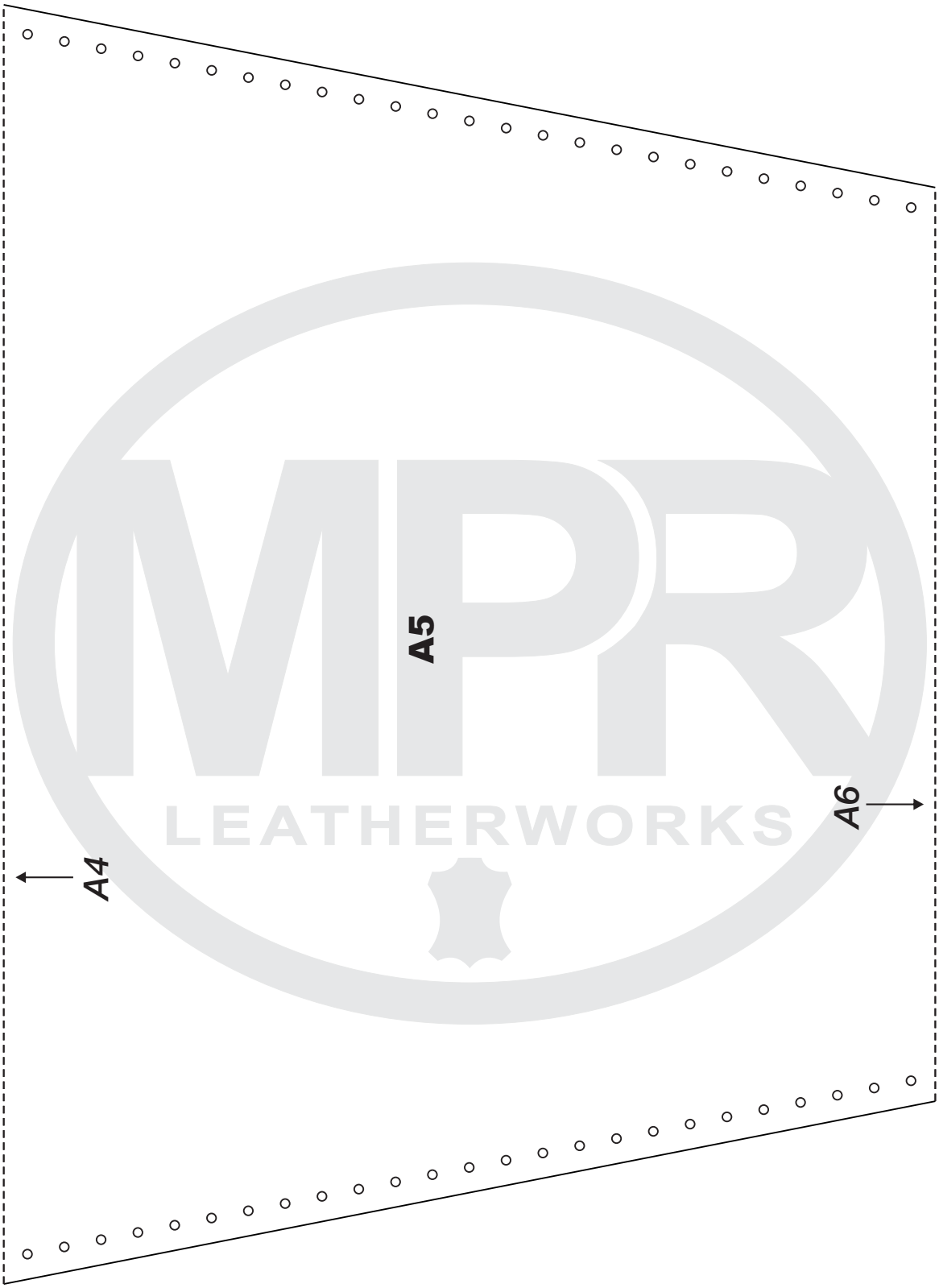

© COPYRIGHTS
www.mprleatherworks.co.za

A4 SIZE

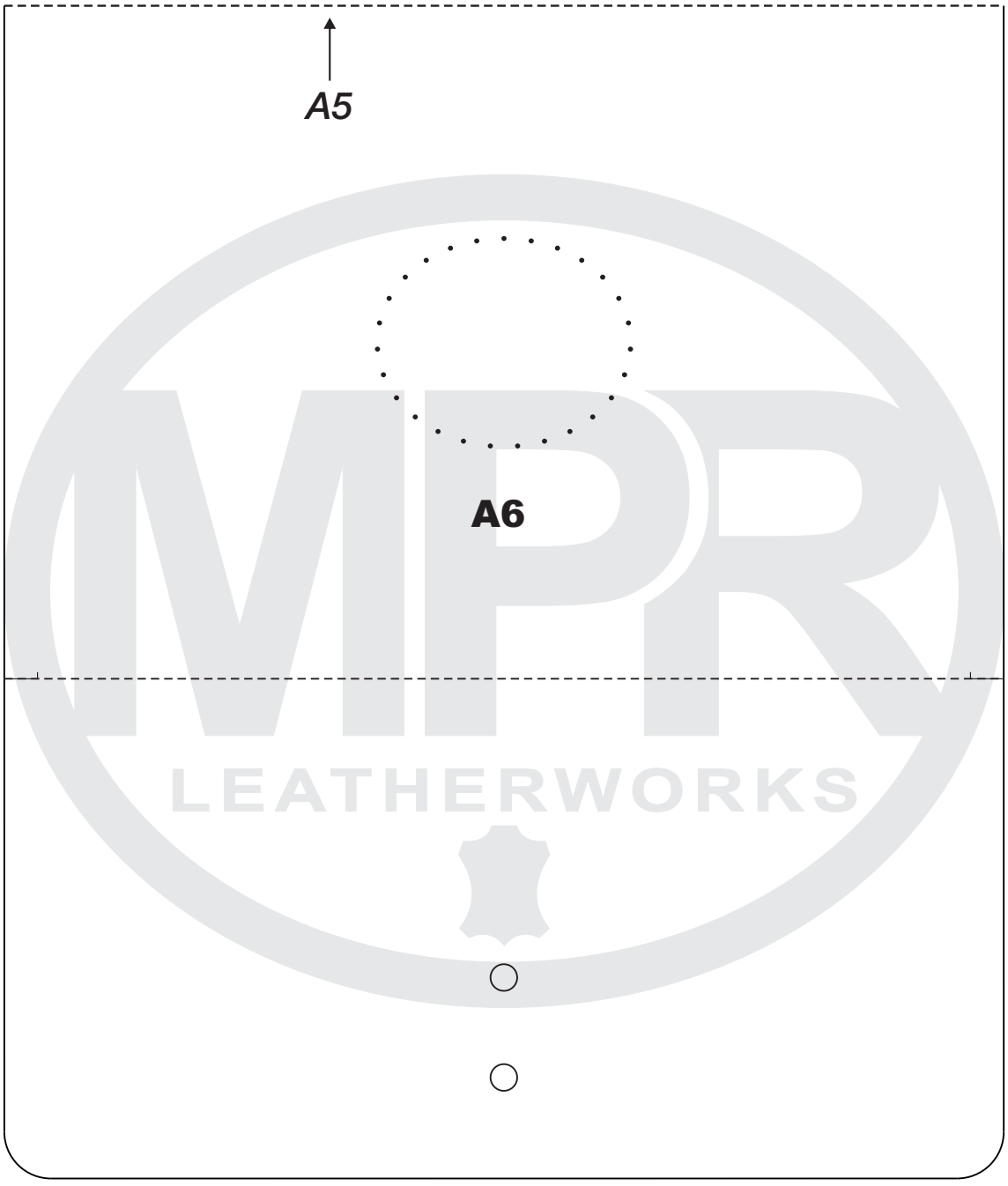

© COPYRIGHTS
www.mprleatherworks.co.za

A4 SIZE

Parts J1 & J2 are the ends of the shoulder strap.
Make the length between these parts to fit.

MPR LEATHERWORKS
© COPYRIGHTS
www.mprleatherworks.co.za

A4 SIZE